TOTO "ICON" SINGLE LEVER LAVATORY FAUCET W/ 1¼" POP-UP WASTE TX115LI

SPECIFICATIONS

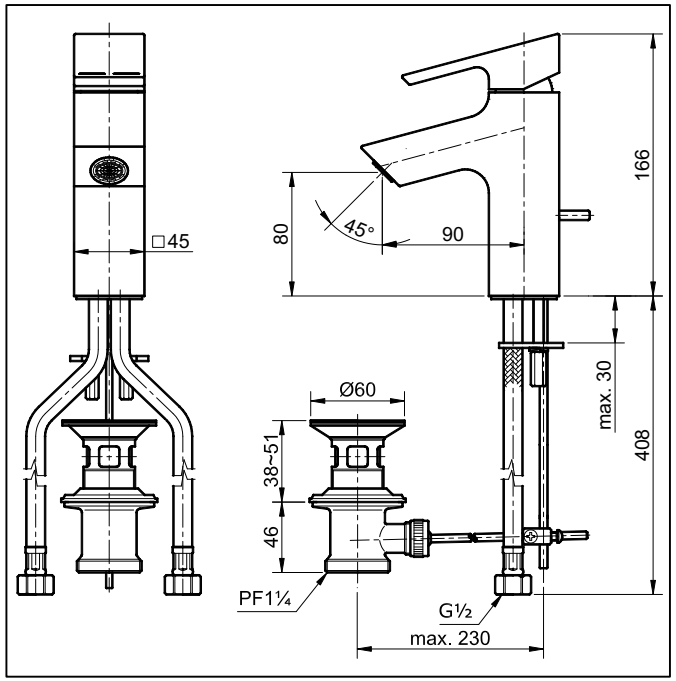

OPERATING CONDITIONS

1. Water supply pressure : 0.05 ~ 0.75 MPa.
2. Ensure that water supply is clean (No Sand, Dirt, Etc.).

MAINTENANCE

Always wipe chrome plated area with dry soft cloth, and sometimes wipe it with cloth soaked in mild soap.

ATTENTION

Use of abrasive cleaning material such as; detergents containing hydrochloric acids, thinner, polishing powder, and nylon brush is not recommended

INSTALLATION

1.

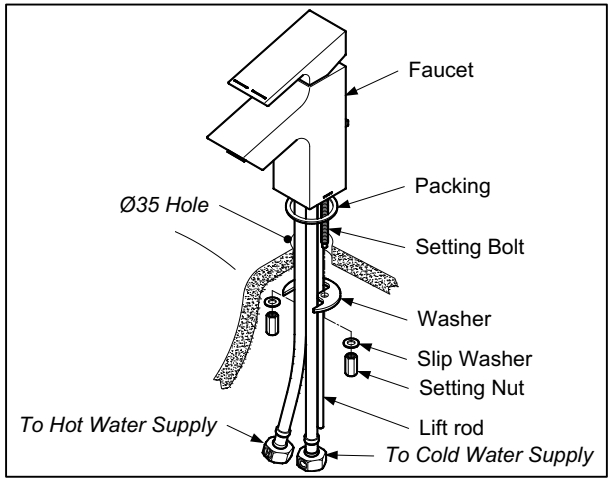

2.

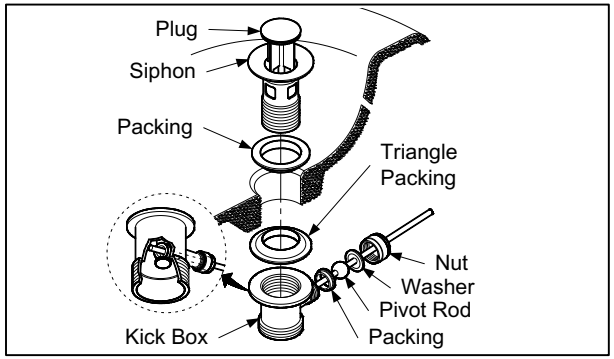

3.

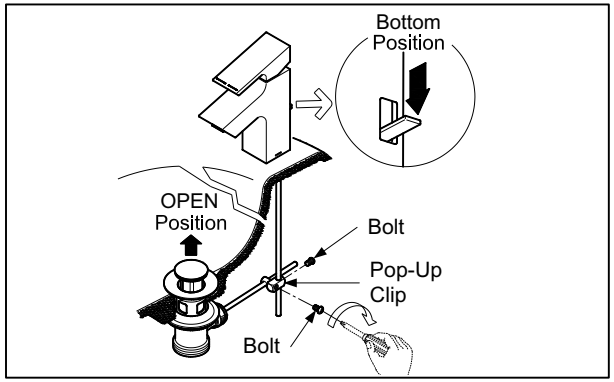

TROUBLESHOOTING
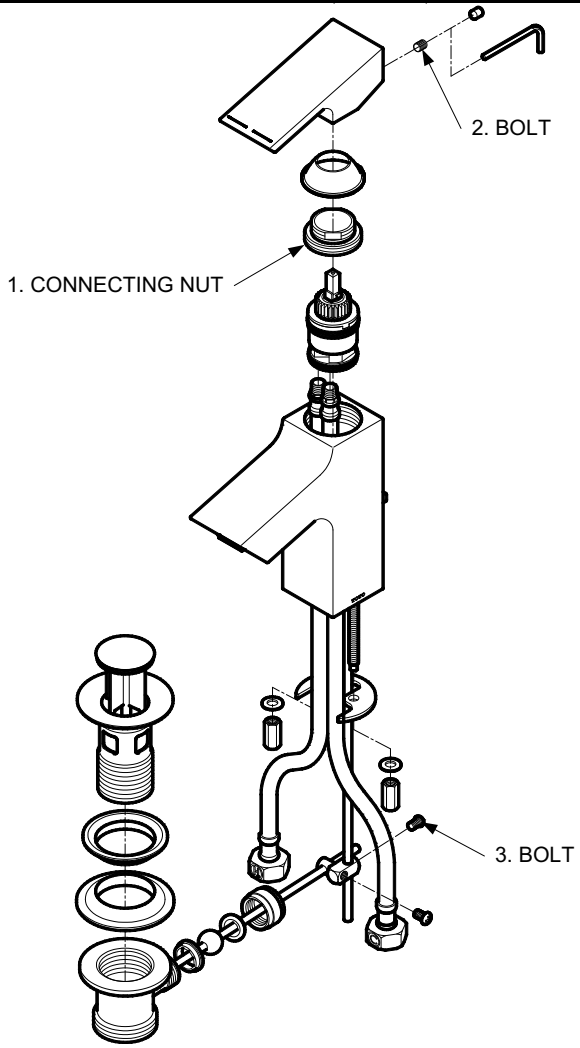
PROBLEM	CHECK POINT	SOLUTION
Water leaks around the handle	1	Tighten
Handle is loose	2	Tighten
Plug cannot open and close	3	Tighten